THE SANDY LOAM TOPSOIL SHALL BE TESTED AT A SOIL TESTING LAB AND:

- MATCH THE USDA SANDY LOAM TOPSOIL CLASSIFICATION
- HAVE 5–8% HUMIFIED ORGANIC MATTER
- HAVE NO LESS THAN 15% PASSING THE #200 SIEVE
- HAVE A CLAY CONTENT OF LESS THAN 2%
- BE FREE OF STONES, STUMPS, ROOTS OR OTHER OBJECTS GREATER THAN 2".

IF THE TOPSOIL DOES NOT CONTAIN SUFFICIENT NUTRIENT CONTENT TO SUPPORT GRASS GROWTH, SUPPLEMENT WITH SUPERHUMUS ORGANIC MATTER AND RETEST ORGANIC MATTER AND CLAY CONTENT.

SPECIFICATION FOR CLAY	
PARTICLE SIZE	MIN. 50% PASSING A #200 SIEVE GRAVEL – 5% MAX. MAX ROCK SIZE = 1" MAX CLOD SIZE = 3"
ATTERBERG LIMITS	LL ≥ 25% PL ≥ 12%
PERMEABILITY	$1x10^{-6}$ cm/s (MAX)

SOIL FOR 12" LOAMY COARSE SAND LAYER (MEDOT #703.01)	
SIEVE SIZE	% PASSING BY WEIGHT
3/8"	100
#4	95–100
#8	80–100
#16	50–85
#30	25–60
#50	10–30
#100	2–10
#200	0–5

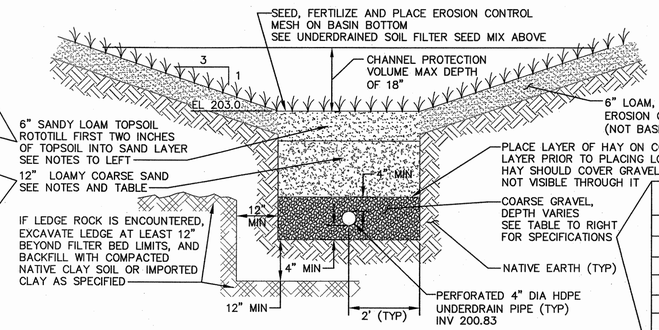

UNDERDRAINED SOIL FILTER SEED MIX	
Name	LBS/ACRE
Creeping Red Fescue	20
Tall Fescue	20
Birdsfoot Trefoil	8
Total	48

COARSE GRAVEL MEDOT SPECIFICATIONS FOR UNDERDRAINS (MEDOT #703.22)	
SIEVE SIZE	% PASSING BY WEIGHT
UNDERDRAIN TYPE B	
1"	90–100
1/2"	75–100
#4	50–100
#20	15–80
#50	0–15
#200	0–5

CONSTRUCTION OVERSIGHT

THE APPLICANT WILL RETAIN THE SERVICES OF A PROFESSIONAL ENGINEER TO INSPECT THE CONSTRUCTION AND STABILIZATION OF ALL STORMWATER MANAGEMENT STRUCTURES. IF NECESSARY, THE INSPECTING ENGINEER WILL INTERPRET THE POND'S AND ROOF DRIPLINE FILTER CONSTRUCTION PLAN FOR THE CONTRACTOR. ONCE ALL STORMWATER MANAGEMENT STRUCTURES ARE CONSTRUCTED AND STABILIZED, THE INSPECTING ENGINEER WILL NOTIFY THE DEPARTMENT IN WRITING WITHIN 30 DAYS TO STATE THAT THE POND HAS BEEN COMPLETED. ACCOMPANYING THE ENGINEER'S NOTIFICATION MUST BE A LOG OF THE ENGINEER'S INSPECTIONS GIVING THE DATE OF EACH INSPECTION, THE TIME OF EACH INSPECTION, AND THE ITEMS INSPECTED ON EACH VISIT, AND INCLUDE ANY TESTING DATA OR SIEVE ANALYSIS DATA OF EVERY MINERAL SOIL AND SOIL MEDIA SPECIFIED IN THE PLANS AND USED ON SITE.

UNDERDRAINED FILTER BASINS

CONSTRUCTION SEQUENCE: THE SOIL FILTER MEDIA AND VEGETATION MUST NOT BE INSTALLED UNTIL THE AREA THAT DRAINS TO THE FILTER HAS BEEN PERMANENTLY STABILIZED WITH PAVEMENT OR OTHER STRUCTURE, 90% VEGETATION COVER, OR OTHER PERMANENT STABILIZATION UNLESS THE RUNOFF FROM THE CONTRIBUTING DRAINAGE AREA IS DIVERTED AROUND THE FILTER UNTIL STABILIZATION IS COMPLETED.
COMPACTION OF SOIL FILTER: FILTER SOIL MEDIA AND UNDERDRAIN BEDDING MATERIAL MUST BE COMPACTED TO BETWEEN 90% AND 92% STANDARD PROCTOR. THE BED SHOULD BE INSTALLED IN AT LEAST 2 LIFTS OF 9 INCHES TO PREVENT POCKETS OF LOOSE MEDIA.

CONSTRUCTION OVERSIGHT: INSPECTION BY A PROFESSIONAL ENGINEER WILL OCCUR AT A MINIMUM:

- AFTER THE PRELIMINARY CONSTRUCTION OF THE FILTER GRADES AND ONCE THE UNDERDRAIN PIPES ARE INSTALLED BUT NOT BACKFILLED,
- AFTER THE DRAINAGE LAYER IS CONSTRUCTED AND PRIOR TO THE INSTALLATION OF THE FILTER MEDIA,
- AFTER THE FILTER MEDIA HAS BEEN INSTALLED AND SEEDED. BIO–RETENTION CELLS MUST BE STABILIZED PER THE PROVIDED PLANTING SCHEME AND DENSITY FOR THE CANOPY COVERAGE OF 30% TO 50%.
- AFTER ONE YEAR TO INSPECT HEALTH OF THE VEGETATION AND MAKE CORRECTIONS, AND
- ALL THE MATERIAL USED FOR THE CONSTRUCTION OF THE FILTER BASIN MUST BE CONFIRMED AS SUITABLE BY THE DESIGN ENGINEER. TESTING MUST BE DONE BY A CERTIFIED LABORATORY TO SHOW THAT THEY ARE PASSING DEP SPECIFICATIONS.

TESTING AND SUBMITTALS: THE CONTRACTOR SHALL IDENTIFY THE LOCATION OF THE SOURCE OF EACH COMPONENT OF THE FILTER MEDIA. ALL RESULTS OF FIELD AND LABORATORY TESTING SHALL BE SUBMITTED TO THE PROJECT ENGINEER FOR CONFIRMATION. THE CONTRACTOR SHALL:

- SELECT SAMPLES FOR SAMPLING OF EACH TYPE OF MATERIAL FOR THE FILTER MEDIA AND SAMPLES OF THE UNDERDRAIN BEDDING MATERIAL. SAMPLES MUST BE A COMPOSITE OF THREE DIFFERENT LOCATIONS (GRABS) FROM THE STOCKPILE OR PIT FACE. SAMPLE SIZE REQUIRED WILL BE DETERMINED BY THE TESTING LABORATORY.
- PERFORM A SIEVE ANALYSIS CONFORMING TO ASTM C136 (STANDARD TEST METHOD FOR SIEVE ANALYSIS OF FINE AND COURSE AGGREGATES) ON EACH TYPE OF THE SAMPLE MATERIAL.

TYPICAL UNDERDRAINED SOIL FILTER DETAIL
NTS

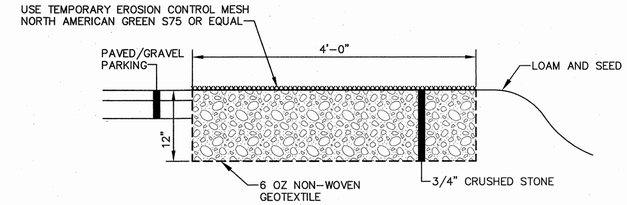

CRUSHED STONE STRIP
NTS

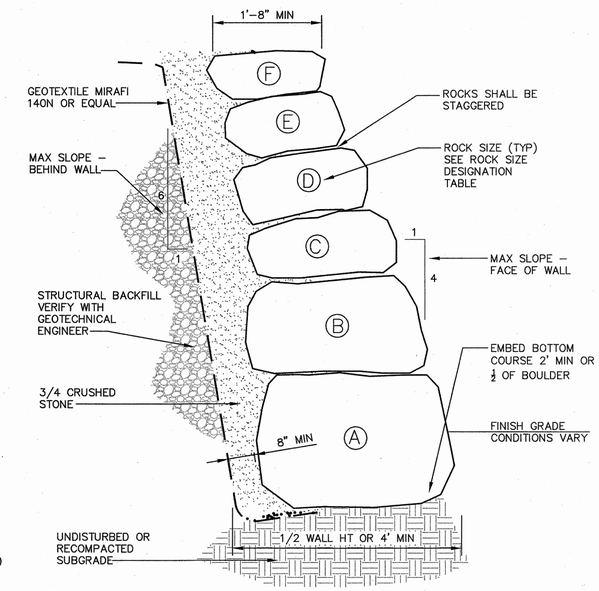

*ROCK HEIGHT SHALL BE APPROX. ½ THE LENGTH

ROCK SIZE DESIGNATION

ROCK TYPE	ROCK WEIGHT	AVERAGE DIMENSION
1	200–660 LBS.	1'–6" TO 3'–0"
2	660–2000 LBS.	2'–0" TO 4'–0"
3	2000–4000 LBS.	2'–6" TO 5'–0"
4	4000–6000 LBS.	3'–0" TO 6'–0"

ROCK TYPE DESIGNATION

WALL HEIGHT	Ⓐ	Ⓑ	Ⓒ	Ⓓ	Ⓔ	Ⓕ
0 TO 3'–3"	2	1	–	–	–	–
3'–3" TO 6'–6"	3	2	1	–	–	–
6'–6" TO 9'–9"	3	3	2	1	–	–
TALLER THAN 9'–9"	4	3	2	2	1	1

NUMBER IN TABLE CORRESPONDS TO ROCK TYPE

BOULDER RETAINING WALL
NTS

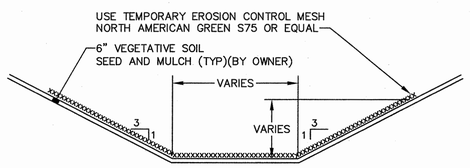

*SEE MANUFACTURER'S LINING INSTALLATION DETAIL FOR STAPLE PATTERNS, VEGETATIVE STABILIZATION SPECIFICATIONS FOR SOIL AMENDMENTS, SEED MIXTURES AND MULCHING INFORMATION.

NOTES:
1. ALL CHANNELS MUST BE KEPT FREE OF OBSTRUCTIONS SUCH AS FILL GROUND, FALLEN LEAVES AND WOODY DEBRIS, ACCUMULATED SEDIMENT AND CONSTRUCTION MATERIALS/WASTES. CHANNELS SHOULD BE KEPT MOWED AND/OR FREE OF ALL WEEDY, BRUSHY OR WOODY GROWTH. ANY UNDERGROUND UTILITIES RUNNING ACROSS/THROUGH THE CHANNEL(S) SHALL BE IMMEDIATELY BACKFILLED AND THE CHANNEL(S) REPAIRED AND STABILIZED PER THE CHANNEL CROSS SECTION DETAIL.
2. VEGETATED CHANNELS SHALL BE CONSTRUCTED FREE OF ROCKS, TREE ROOTS, STUMPS OR OTHER PROJECTIONS THAT WILL IMPEDE NORMAL CHANNEL FLOW AND/OR PREVENT GOOD LINING TO SOIL CONTACT. THE CHANNEL SHALL BE INITIALLY OVER–EXCAVATED TO ALLOW FOR THE PLACEMENT OF TOPSOIL.

OVERFLOW SPILLWAY
NTS

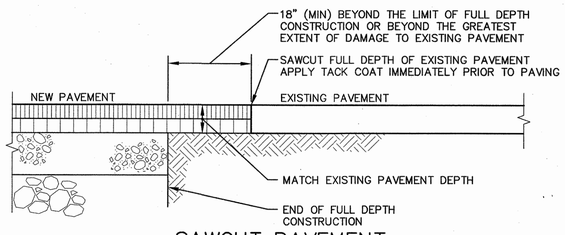

SAWCUT PAVEMENT
NTS

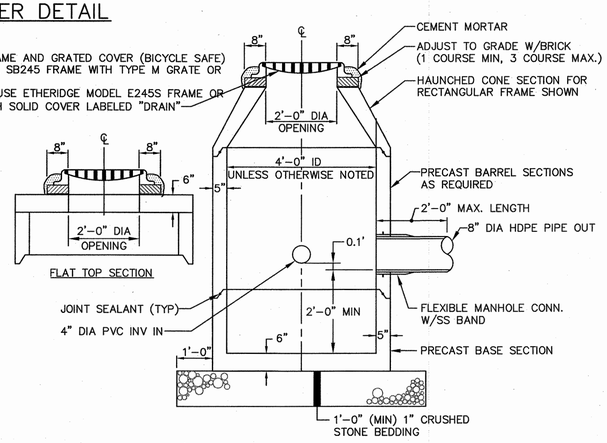

SOIL FILTER OUTLET STRUCTURE
NTS

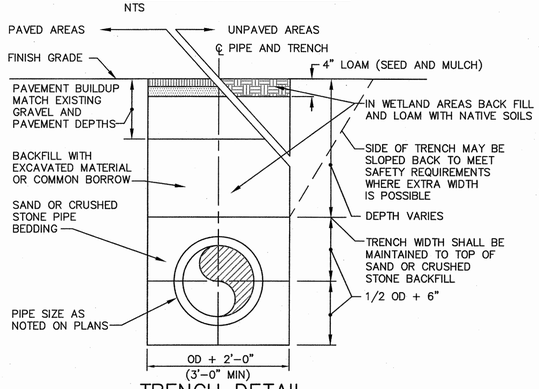

TRENCH DETAIL
NTS

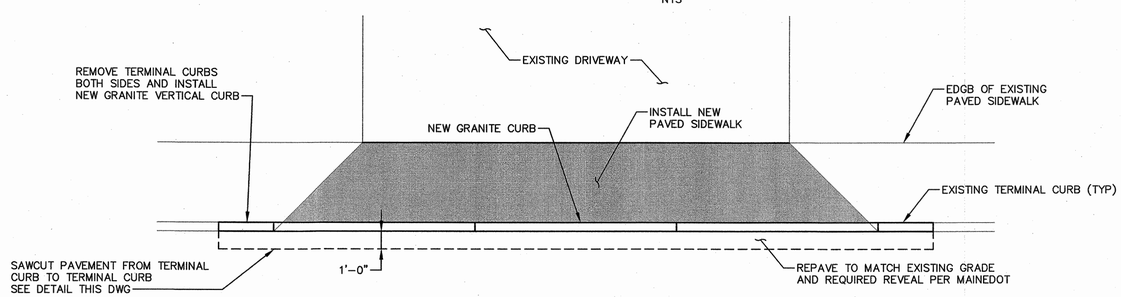

CURB CUT CLOSURE DETAIL
NTS

REV.	BY	DATE	STATUS
	JCM	11/9/16	REVISED PER TOWN COMMENTS AND SUBMITTED TO TOWN FOR APPROVAL
	DPD	10/28/16	REVISED PER TOWN COMMENTS
	DPD	10/3/16	ISSUED TO TOWN FOR SITE PLAN REVIEW

STATE OF MAINE
DAVID P. DOTE JR.
No. 5144
LICENSED
PROFESSIONAL ENGINEER
11/9/16

APPLE ANNIE'S ENTERPRISES, INC
THE PLAZA – PHASE I
881 ROOSEVELT TRAIL
WINDHAM, MAINE

DRAINAGE DETAILS

SME
Sevee & Maher Engineers, Inc.
ENVIRONMENTAL • CIVIL • GEOTECHNICAL • WATER • COMPLIANCE
4 Blanchard Road, PO Box 85A, Cumberland Center, Maine 04021
Phone 207.829.5016 • Fax 207.829.5692 • www.smemaine.com

DESIGN BY: DPD
DRAWN BY: SJM
DATE: 9/28/2016
CHECKED BY:
LMN: NONE
CTB: SME–STD

JOB NO. 15243.00 DWG FILE DETAILS

C–302

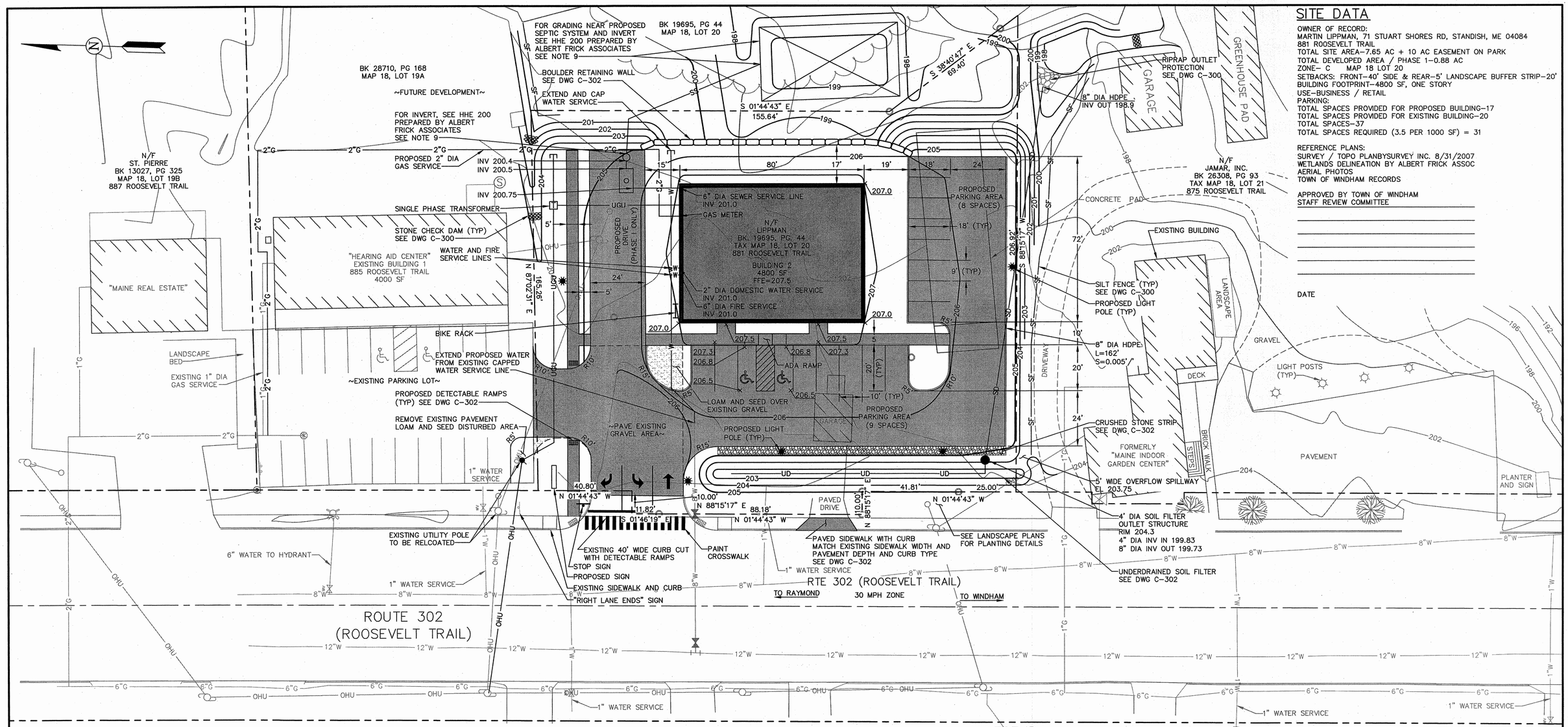

SITE DATA

OWNER OF RECORD:
MARTIN LIPPMAN, 71 STUART SHORES RD, STANDISH, ME 04084
881 ROOSEVELT TRAIL
TOTAL SITE AREA–7.65 AC + 10 AC EASEMENT ON PARK
TOTAL DEVELOPED AREA / PHASE 1–0.88 AC
ZONE– C MAP 18 LOT 20
SETBACKS: FRONT–40' SIDE & REAR–5' LANDSCAPE BUFFER STRIP–20'
BUILDING FOOTPRINT–4800 SF, ONE STORY
USE–BUSINESS / RETAIL
PARKING:
TOTAL SPACES PROVIDED FOR PROPOSED BUILDING–17
TOTAL SPACES PROVIDED FOR EXISTING BUILDING–20
TOTAL SPACES–37
TOTAL SPACES REQUIRED (3.5 PER 1000 SF) = 31

REFERENCE PLANS:
SURVEY / TOPO PLANBYSURVEY INC. 8/31/2007
WETLANDS DELINEATION BY ALBERT FRICK ASSOC
AERIAL PHOTOS
TOWN OF WINDHAM RECORDS

APPROVED BY TOWN OF WINDHAM
STAFF REVIEW COMMITTEE

DATE

NOTES:

1. EXISTING TOPOGRAPHY FROM PLAN TITLED "BOUNDARY SURVEY 881, 885, 875 ROOSEVELT TRAIL WINDHAM, MAINE" BY SURVEY, INC., WINDHAM MAINE, DATED JULY 30, 2012, REVISED MAY 6, 2013. STANDARD PRACTICE DICTATES THAT PLANS COMPILED IN THIS MANNER SHOULD BE FIELD VERIFIED BY THE CONTRACTOR PRIOR TO CONSTRUCTION.
2. WETLAND DELINEATION BY AL FRICK ASSOCIATES, INC., GORHAM, MAINE.
3. ALL SITE AND CONSTRUCTION ACTIVITIES SHALL BE IN COMPLIANCE WITH MEDEP BEST MANAGEMENT PRACTICES AND EXISTING FEDERAL, STATE, AND LOCAL PERMITS AND PERMITTING REQUIREMENTS FOR THE SITE.
4. PAVING AND TRENCH REPAIR IN ROUTE 302 SHALL BE IN ACCORDANCE WITH TOWN OF WINDHAM AND PORTLAND WATER DISTRICT STANDARDS.
5. PROVIDE AT LEAST 5 FEET OF COVER OVER WATER LINES.
6. PROVIDE CONCRETE THRUST BLOCK FOR WATER LINE PER TABLE ON C–301.
7. COORDINATE WORK ON WATER MAIN WITH PORTLAND WATER DISTRICT.
8. PROVIDE TRAFFIC CONTROL SIGNAGE DURING CONSTRUCTION IN ACCORDANCE WITH U.S.D.O.T. MANUAL ON UNIFORM TRAFFIC CONTROL DEVICES (MUTCD).
9. TWO 2000 GALLON SEPTIC TANKS SHOWN. ACTUAL SIZE AND CONFIGURATION TO BE AS DESIGNED IN HHE–200 FORM BY LICENSED SITE EVALUATOR.
10. REMOVE EXISTING BUILDING AND STRUCTURES WITHIN CONSTRUCTION LIMITS.
11. UNDERGROUND UTILITY CONSTRUCTION WITH ROUTE 302 TO BE COORDINATED WITH TOWN ENGINEER 48 HOURS PRIOR TO CONSTRUCTION.

DIG SAFE NOTES:

PRIOR TO EXCAVATION, VERIFY THE UNDERGROUND UTILITIES, PIPES, STRUCTURES AND FACILITIES. PROVIDE THE FOLLOWING MINIMUM MEASURES:

1. PRE–MARK THE BOUNDARIES OF YOUR PLANNED EXCAVATION WITH WHITE PAINT, FLAGS OR STAKES, SO UTILITY CREWS KNOW WHERE TO MARK THEIR LINES.
2. CALL DIG SAFE, AT 811, AT LEAST THREE BUSINESS DAYS – BUT NO MORE THAN 30 CALENDAR DAYS – BEFORE STARTING WORK. DO NOT ASSUME SOMEONE ELSE WILL MAKE THE CALL.
3. IF BLASTING, NOTIFY DIG SAFE AT LEAST ONE BUSINESS DAY IN ADVANCE.
4. WAIT THREE BUSINESS DAYS FOR LINES TO BE LOCATED AND MARKED WITH COLOR–CODED PAINT, FLAGS OR STAKES. NOTE THE COLOR OF THE MARKS AND THE TYPE OF UTILITIES THEY INDICATE. TRANSFER THESE MARKS TO THE AS–BUILT DRAWINGS.
5. CONTACT THE LANDOWNER AND OTHER "NON–MEMBER" UTILITIES (WATER, SEWER, GAS, ETC.). FOR THEM TO MARK THE LOCATIONS OF THEIR UNDERGROUND FACILITIES. TRANSFER THESE MARKS TO THE AS–BUILT DRAWINGS.
6. RE–NOTIFY DIG SAFE AND THE NON–MEMBER UTILITIES IF THE DIGGING, DRILLING OR BLASTING DOES NOT OCCUR WITHIN 30 CALENDAR DAYS, OR IF THE MARKS ARE LOST DUE TO WEATHER CONDITIONS, SITE WORK ACTIVITY OR ANY OTHER REASON.
7. HAND DIG WITHIN 18 INCHES IN ANY DIRECTION OF ANY UNDERGROUND LINE UNTIL THE LINE IS EXPOSED. MECHANICAL METHODS MAY BE USED FOR INITIAL SITE PENETRATION, SUCH AS REMOVAL OF PAVEMENT OR ROCK.
8. DIG SAFE REQUIREMENTS ARE IN ADDITION TO TOWN, CITY AND/OR STATE DOT STREET OPENING PERMIT REQUIREMENTS.
9. FOR COMPLETE DIG SAFE REQUIREMENTS, CALL THE PUC OR VISIT THEIR WEBSITE.
10. IF YOU DAMAGE, DISLOCATE OR DISTURB ANY UNDERGROUND UTILITY LINE, IMMEDIATELY NOTIFY THE AFFECTED UTILITY. IF DAMAGE CREATES SAFETY CONCERNS, CALL THE FIRE DEPARTMENT AND TAKE IMMEDIATE STEPS TO SAFEGUARD HEALTH AND PROPERTY.
11. ANY TIME AN UNDERGROUND LINE IS DAMAGED OR DISTURBED OR IF LINES ARE IMPROPERLY MARKED, YOU MUST FILE AN INCIDENT REPORT WITH THE P.U.C. FOR AN INCIDENT REPORT FORM VISIT WWW.STATE.ME.US/MPUC OR CALL THE PUC AT 1–800–452–4699.

LEGEND

EXISTING		PROPOSED
	PROPERTY LINE	
	RIGHT OF WAY	
	CENTERLINE	
	BUILDING	
	EDGE OF PAVEMENT	
	CURB	
	EDGE OF GRAVEL	
100	CONTOUR	100
	SPOT GRADE	207.0
	FENCE	
	UTILITY POLE	
	OVERHEAD UTILITY	
	LIGHT POLE	
W	WATER LINE	W
	WATER GATE VALVE	
	HYDRANT	
G	GAS LINE	G
	GAS VALVE	
	SEWER MANHOLE	
	SIGN	
	STORM DRAIN	SD
	UNDERDRAIN	UD
	SILT FENCE	SF
	STONE CHECK DAM	
	RIPRAP	

10 0 20 40 FEET

REV.	BY	DATE	STATUS
	JCM	11/9/16	REVISED PER TOWN COMMENTS AND SUBMITTED TO TOWN FOR APPROVAL
	DPD	10/28/16	REVISED PER TOWN COMMENTS
	DPD	10/3/16	ISSUED TO TOWN FOR SITE PLAN REVIEW

STATE OF MAINE
JOHN A. LEWIS, JR.
No. 5144
LICENSED
PROFESSIONAL ENGINEER
11/9/16

APPLE ANNIE'S ENTERPRISES, INC
THE PLAZA – PHASE I
881 ROOSEVELT TRAIL
WINDHAM, MAINE

SITE, GRADING AND UTILITY PLAN

SME
Sevee & Maher Engineers, Inc.
ENVIRONMENTAL • CIVIL • GEOTECHNICAL • WATER • COMPLIANCE
4 Blanchard Road, PO Box 85A, Cumberland Center, Maine 04021
Phone 207.829.5016 • Fax 207.829.5692 • www.smemaine.com

DESIGN BY: DPD
DRAWN BY: SJM
DATE: 9/28/2016
CHECKED BY: JAL
LMN: SITEPLAN
CTB: SME–STD

JOB NO. 15243 DWG FILE BASE

C–100

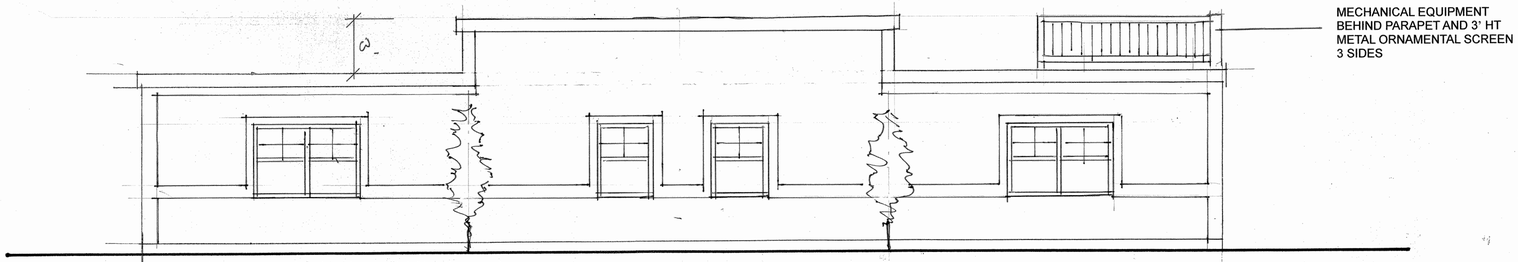

RIGHT ELEVATION 1/4" =1'

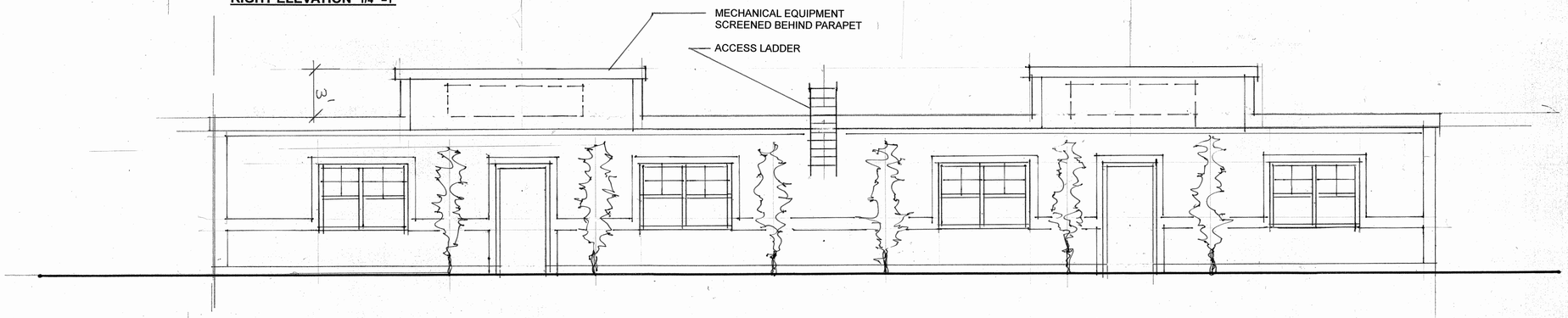

REAR ELEVATION 1/4" =1'

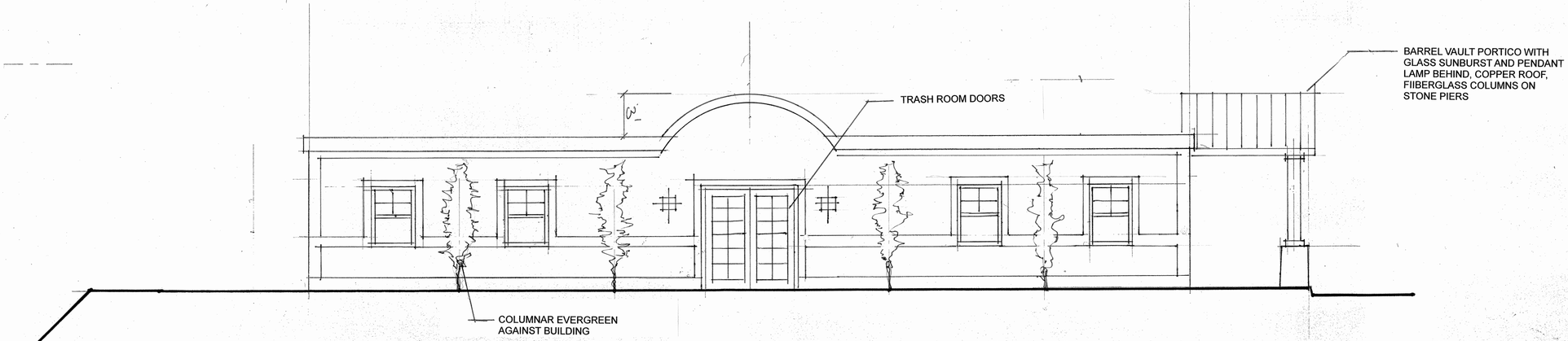

LEFT ELEVATION 1/4" =1'

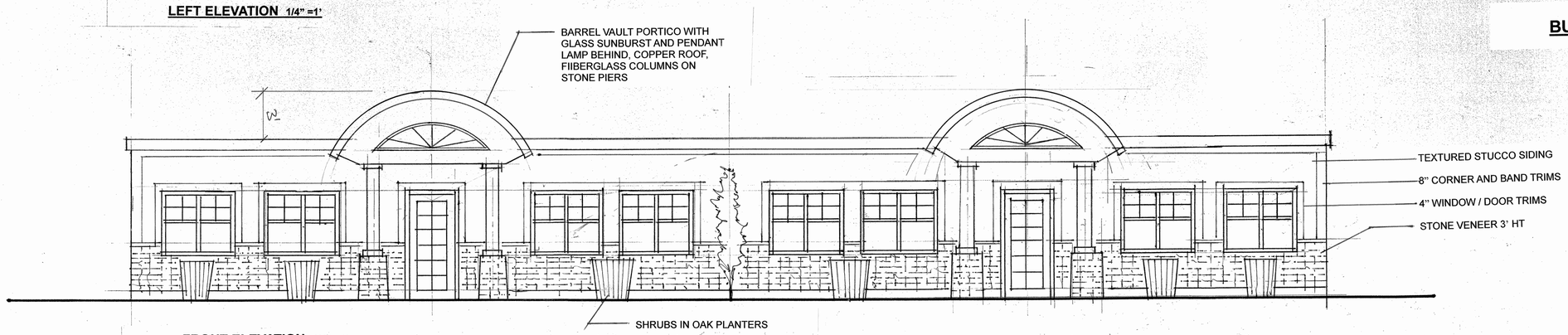

FRONT ELEVATION 1/4" =1'

BUILDING ELEVATIONS

PLANNING / DESIGN ASSOCIATES
COMMERCIAL / RESIDENTIAL / RECREATIONAL DESIGN SERVICES
- SITE PLANNERS
- ARCHITECTURAL DESIGNERS
- CONSULTING ENGINEERS
- LANDSCAPE ARCHITECTS
- PROJECT & SHORELAND ZONE PERMITTING
- REAL ESTATE DEVELOPMENT CONSULTANTS

9 Alexander Drive, Windham, ME 882-2640 Email: plandesign@live.com

THE PLAZA / PHASE 1
DEVELOPER-MARTIN LIPPMAN
DBA APPLE ANNIE LLC